SKRP 4.2 × 3.2mm Compact High Operating Force (Surface Mount Type)

High operation force satisfies the needs in automotive applications. Wide stem & good mountability

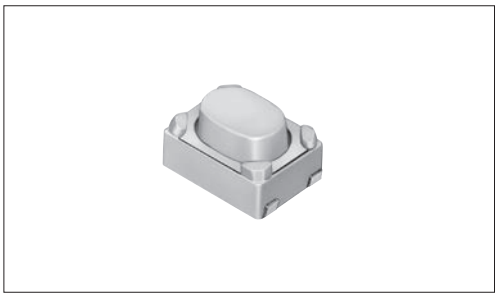

Typical Specifications

Items	Specifications
Rating (max.)	50mA 16V DC
Rating (min.)	10μA 1V DC
Initial contact resistance	500mΩ max.
Travel (mm)	0.2

Product Line

Product No.	Operating force	Operating direction	Operating life (5mA 5V DC)	Stem color	Minimum order unit (pcs.)	
					Japan	Export
SKRPABE010	1.57N	Top push	100,000 cycles	Natural	4,000	4,000
SKRPACE010	2.55N		50,000 cycles			
SKRPADE010	4N		100,000 cycles	Black		

Packing Specifications

Taping

Number of packages (pcs.)			Tape width (mm)	Export package measurements (mm)
1 reel	1 case / Japan	1 case / export packing		
4,000	40,000	40,000	12	401×401×214

Unit:mm

Reel size

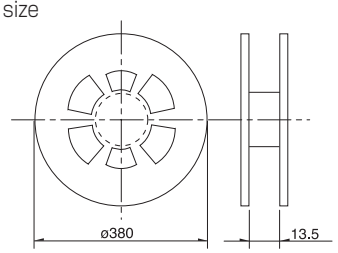

Note

For reels of 330mm diameter, please inquire.

Dimensions

Unit:mm

Style	PC board land dimensions (Viewed from switch mounting face)
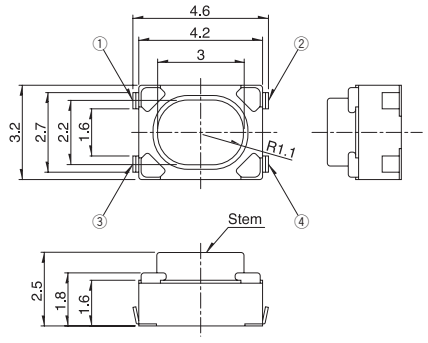	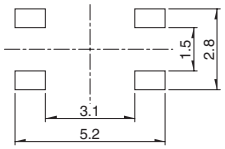

Circuit Diagram

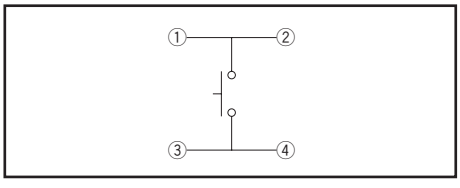

Refer to P.259 for soldering conditions.

TACT Switch™
List of Varieties

Type		Sharp Feeling Type							
		Surface Mount							
Series		SKTH	SKRP	SKQM	SKQY	SKSU	SKST	SKRA	SKHM
Photo									
Features		Compact size	High operation force Compact size	Compact size		Middle travel			—
Water-proof		—	—	—	—	●	—	○	—
Dust-proof		●	—	—	—	●	—	○	—
IP standard		—	—	—	—	67 equivalency	—	67 equivalency	—
Operating direction	Top push	●	●	●	●	●	●	●	●
	Side push	—	—	—	—	—	—	—	—
Dimensions (mm)	W	3.5	4.2	6	6.1	5.3	8.5	□6.2	6.2
	D	3.2	3.2	3.5	3.7	5.4	8.5		6.5
	H	1.8/2.5	2.5	4.3/5	2.5	3.85	3.95	3.5/5.2	3.1
Operation force coverage	to 1N								
	1N to 2N								
	2N to 3N								
	3N to 4N								
	4N to 5N								
Travel (mm)		0.12	0.2	0.25		0.7	0.9	See the relevant pages for respective product descriptions	0.25
Ground terminal		—	—	—	○	—	—	—	●
Operating temperature range		−40℃ to +90℃							−40℃ to +85℃
Automotive use		●	●	●	●	●	●	○	—
Life Cycle		★2	★3	★2	★2	★3	★2	★3	★3
Electrical performance	Rating (max.) (Resistive load)	25mA 16V DC	50mA 16V DC	50mA 12V DC		50mA 16V DC		50mA 12V DC	
	Rating (min.) (Resistive load)	10μA 1V DC							
	Insulation resistance	100MΩ min. 100V DC 1min.							
	Voltage proof	100V AC 1min.	250V AC 1min.						
Durability	Vibration	0 to 55 to 10Hz/min., the amplitude is 1.5mm for all the frequencies, in the 3 direction of X, Y and Z for 2 hours respectively							
	Lifetime	Shall be in accordance with individual specifications.							
Environmental performance	Cold	−40℃ 96h	−40℃ 1,000h	−40℃ 96h		−40℃ 1,000h			−40℃ 96h
	Dry heat	90℃ 96h	90℃ 1,000h	90℃ 96h		90℃ 1,000h			90℃ 96h
	Damp heat	60℃, 90 to 95%RH 96h	60℃, 90 to 95%RH 1,000h	60℃, 90 to 95%RH 96h		60℃, 90 to 95%RH 1,000h			60℃, 90 to 95%RH 96h
Page		227	229	230	231	233	234	235	236

W : Width. The most outer dimension excluding terminal portion.
D : Depth. The most outer dimension excluding terminal portion.
H : Height. The minimum dimension if there are variances.

TACT Switch™ Soldering Conditions · · ·

Condition for Reflow

Available for Surface Mount Type.

1. Temperature measurement: Thermocouple ϕ 0.1 to 0.2 CA (K) or CC (T) at solder joints (copper foil surface).
   A heat resistive tape should be used to fix thermocouple.
2. Temperature profile

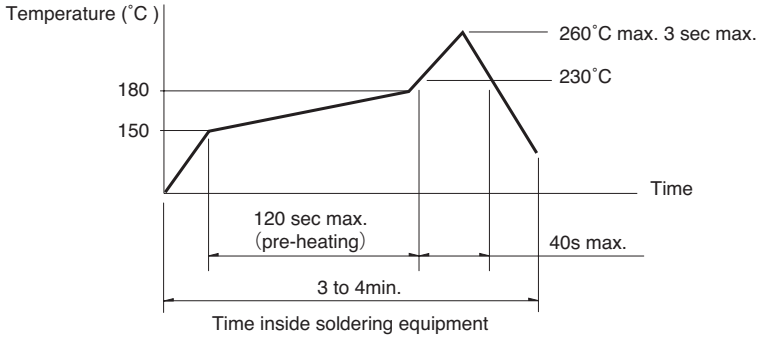

Notes

1. The above temperature shall be measured of the top of switch. There are cases where the PC board's temperature greatly differs from that of the switch, depending on the material, size, thickness of PC boards and others.
   The above-stated conditions shall also apply to switch surface temperatures.
2. Soldering conditions differ depending on reflow soldering machines.
   Prior verification of soldering condition is highly recommended.

Conditions for Auto-dip

Available for Snap-in Type and Radial Type.

Items	Condition
Flux built-up	Mounting surface should not be exposed to flux
Preheating temperature	Ambient temperature of the soldered surface of PC board. 100℃ max.
Preheating time	60s max.
Soldering temperature	260℃ max.
Duration of immersion	5s max.
Number of soldering	2times max.

SKHH, SKPD Series

Items	Condition
Flux built-up	Mounting surface should not be exposed to flux
Preheating temperature	Ambient temperature of the soldered surface of PC board. 110℃ max.
Preheating time	60s max.
Soldering temperature	260℃ max.
Duration of immersion	5s max.
Number of soldering	2times max.

SKQJ, SKQK, SKEG Series

Items	Condition
Flux built-up	Mounting surface should not be exposed to flux
Preheating temperature	Ambient temperature of the soldered surface of PC board. 100℃ max.
Preheating time	45s max.
Soldering temperature	255℃ max.
Duration of immersion	5s max.
Number of soldering	2times max.

Manual Soldering

Items	Condition
Soldering temperature	350℃ max.
Duration of soldering	3s max.
Capacity of soldering iron	60W max.

SKHH, SKHW, SKRG, SKPD Series

Items	Condition
Soldering temperature	360℃ max.
Duration of soldering	3s max.
Capacity of soldering iron	60W max.

SKTD, SKTG, SKQJ, SKQK, SKEG Series

Items	Condition
Soldering temperature	350℃ max.
Duration of soldering	3s max.
Capacity of soldering iron	20W max.

Notes

1. Prevent flux penetration from the top side of the TACT Switch™.
2. Switch terminals and a PC board should not be coated with flux prior to soldering.
3. The second soldering should be done after the switch is stable with normal temperature.
4. Use the flux with a specific gravity of min 0.81.
   (EC-19S-8 by TAMURA Corporation, or equivalents.)